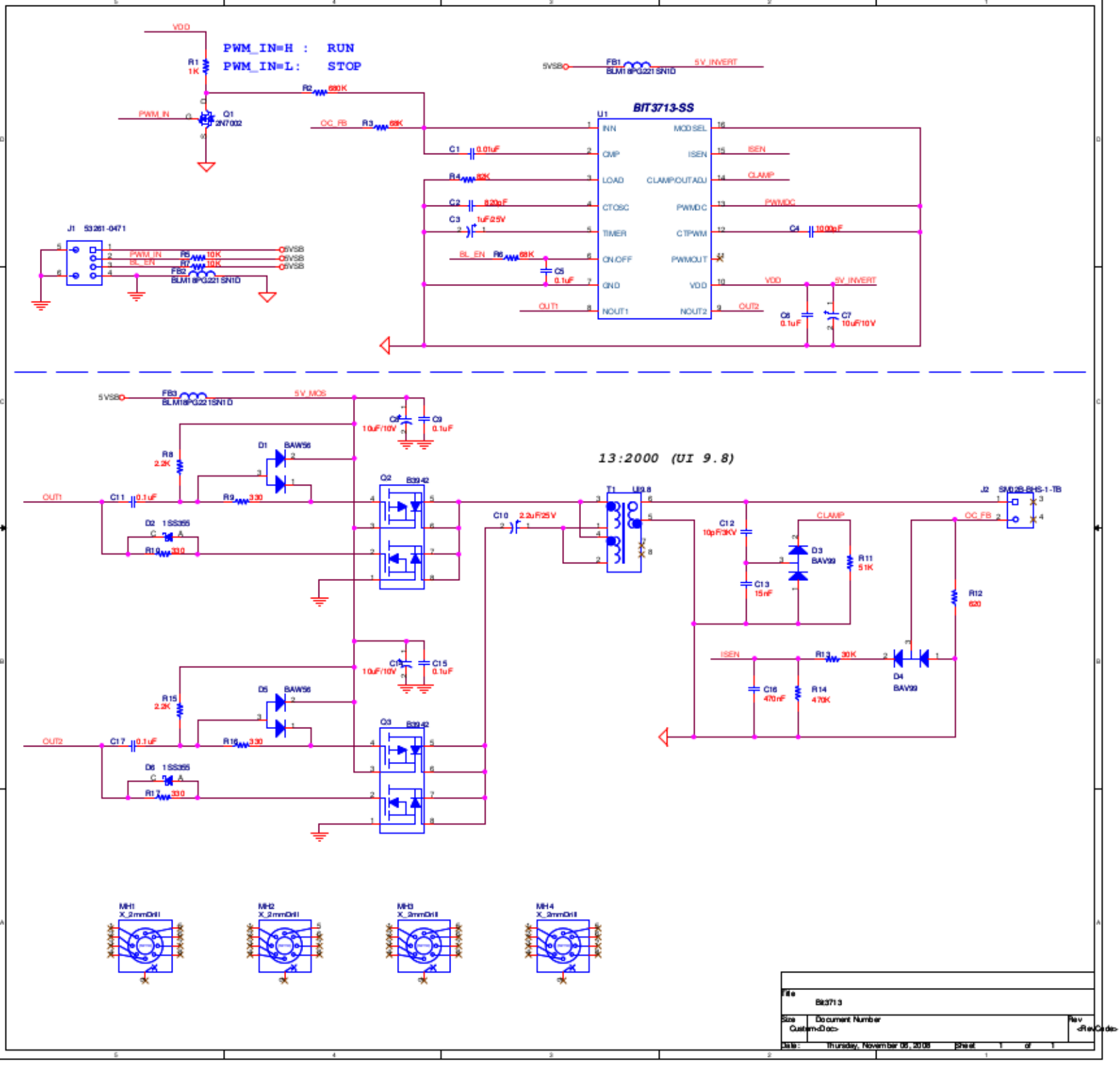
PWM_IN=H : RUN
PWM_IN=L: STOP
VDD
R1 1K
R2 680K
PWM_IN
Q1 2N7002
OC_FB
R3 68K
5VSB
FB1 BLM18PG221SN1D
5V_INVERT
BIT3713-SS
U1
INN
CMP
LOAD
CTOSC
TIMER
ON/OFF
GND
NOUT1
MODSEL
ISEN
CLAMP/OUTADJ
PWMDC
CTPWM
PWMOUT
VDD
NOUT2
C1 0.01uF
R4 82K
C2 820pF
C3 1uF/25V
BL_EN
R6 68K
C5 0.1uF
OUT1
OUT2
C4 1000pF
C6 0.1uF
C7 10uF/10V
J1 53261-0471
PWM_IN
BL_EN
R5 10K
R7 10K
FB2 BLM18PG221SN1D
5VSB
FB3 BLM18PG221SN1D
5V_MOS
C8 10uF/10V
C9 0.1uF
R8 2.2K
D1 BAW56
Q2 B3942
OUT1
C11 0.1uF
R9 330
D2 1SS355
R10 330
13:2000 (UI 9.8)
T1 UI9.8
C10 2.2uF/25V
C12 10pF/3KV
CLAMP
D3 BAV99
R11 51K
C13 15nF
J2 SM02B-BHS-1-TB
OC_FB
R12 620
ISEN
R13 30K
D4 BAV99
C16 470nF
R14 470K
C14 10uF/10V
C15 0.1uF
R15 2.2K
D5 BAW56
Q3 B3942
OUT2
C17 0.1uF
R16 330
D6 1SS355
R17 330
MH1 X_2mmDrill
MH2 X_2mmDrill
MH3 X_2mmDrill
MH4 X_2mmDrill
Title
Bit3713
Size
Custom<Doc>
Document Number
Rev
<RevCode>
Date: Thursday, November 06, 2008
Sheet 1 of 1